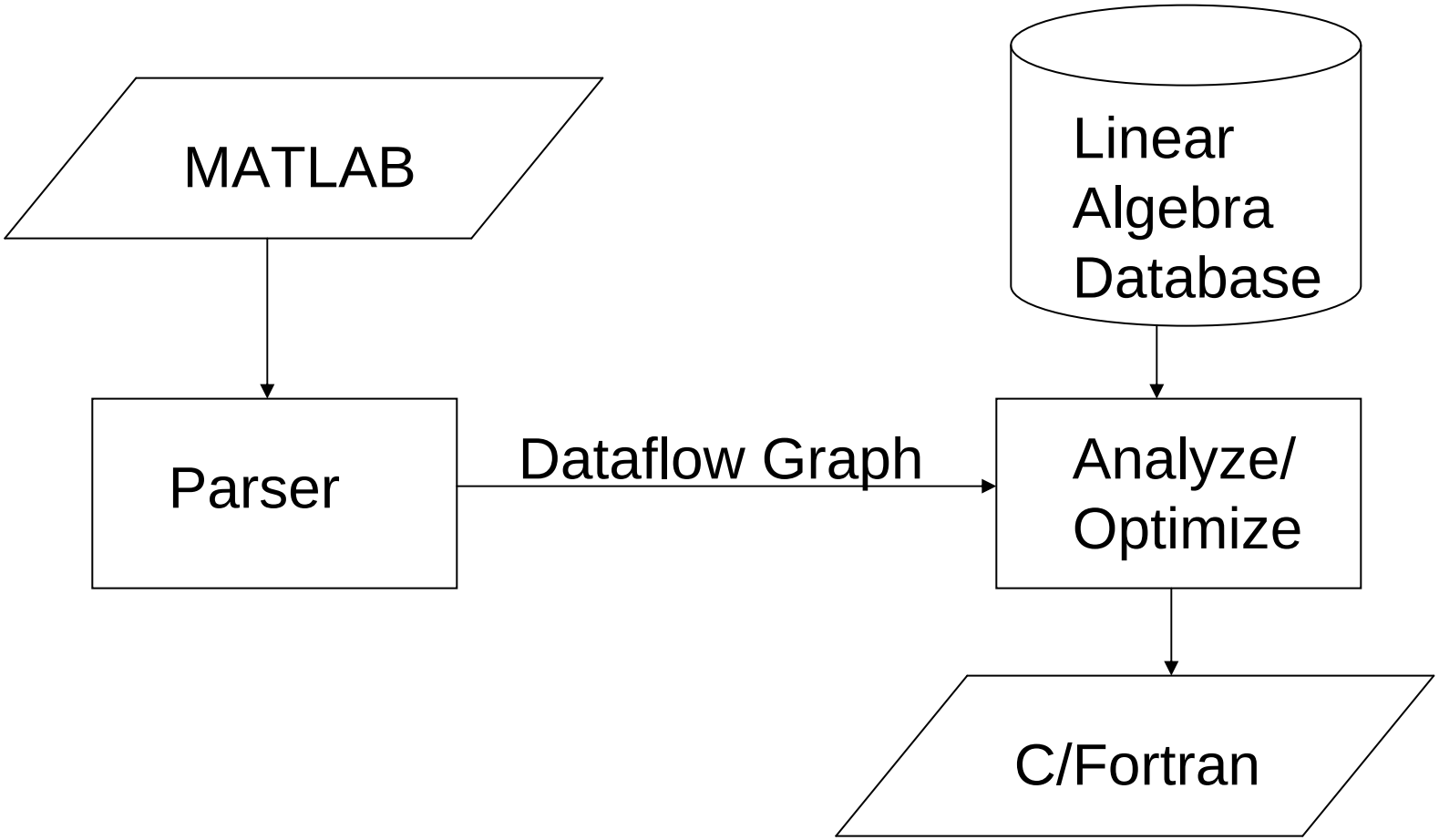
MATLAB
Linear
Algebra
Database
Parser
Dataflow Graph
Analyze/
Optimize
C/Fortran